NX 300A

NX 300EA

NX300A 300EA

Features for NX 300A / 300EA

- Numerical earth leakage relay
- Programmable current sensitivity and time delay
- Detection of no connection to ZCT
- Relay trip indicator
- Relay alarm indicator
- Real-time leakage current display
- 50% pre-fault indicator
- Leakage fault current recording
- Standard DIN 96x96mm panel mounting
- Protected against nuisance tripping

Features for NX 300EA only

- Positive safety output contact
- Pre-fault alarm contact
- Remote reset function

Technical Data

AUXILIARY SUPPLY

Model NX300A / 300EA -230A	: 184 ~ 276 V AC
Model NX300A / 300EA -110A	: 94 ~ 127 V AC
Rated frequency	: 50 Hz
VA rating	: 3 VA typical

SETTING

Sensitivity adjustment	: 30mA, 50mA, 0.10~1.00A(Step=50mA) 1.00~10.0A (Step=1.00A)
Time delay adjustment	: Instantaneous, 0.1~3.0sec (Step=0.1s)

PERFORMANCE

Setting accuracy	: -15% to +0%
Timing accuracy	: ±5%

RECORD

Fault record	: 3 latest tripped fault currents or "tSt" for manual test trip
Storage	: Non-volatile memory

INPUT

Remote Reset	: N.O. dry contact *

OUTPUTS

Trip contact	: Activated during leakage trip, manual test trip or ZCT connection error
Positive safety contact*	: Activated when powerup and relay function correctly
Alarm contact*	: Activated when measured leakage current exceeded 50% of IΔn.

OUTPUT CONTACTS

Rated voltage	: 240 V AC
Contact rating	: 5 A
Expected electrical life	: 100,000 operations at rated current
Expected mechanical life	: 5 x 10^6 operations

INDICATORS

Pre-fault alarm	: Red indicator (Normal blink)
Time delay	: Red indicator (Fast blink)
Leakage trip	: 7-segment display and red indicator
ZCT connection error	: 7-segment display and red indicator
Real-time leakage current	: 7-segment display

ZERO - PHASE CURRENT TRANSFORMER

To operate with Mikro's ZCT series of current transformer

ENVIRONMENTAL CONDITIONS

Temperature	: -10°C to 55°C
Humidity	: 5% to 95%, non-condensing

MECHANICAL

Mounting	: Panel mounting
Dimension (mm)	: 96(w) x 96(h) x 90(d)
Enclosure protection	: IP54 at the panel
Approximate weight	: 0.4 kg (excluding ZCT)

**Applicable to NX300EA series only*

Mikro®

www.itmikro.com

Typical Application Diagram For NX 300A

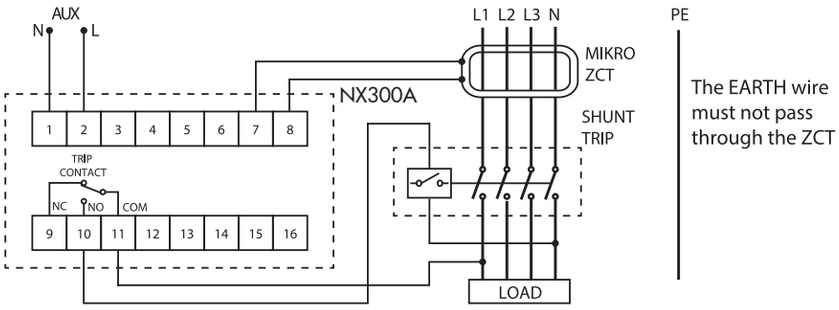

Typical Application Diagram For NX 300EA

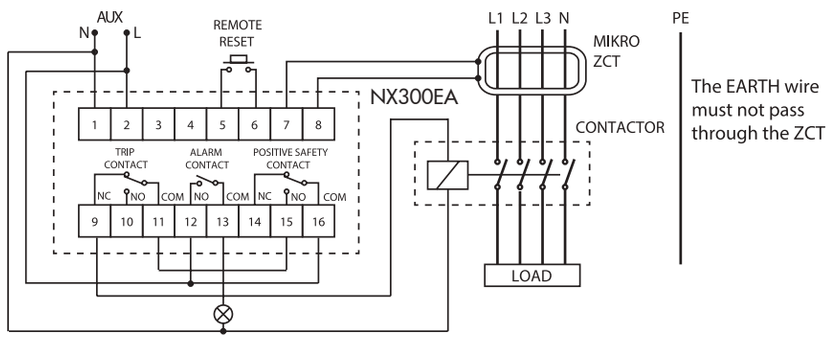

Case Dimensions

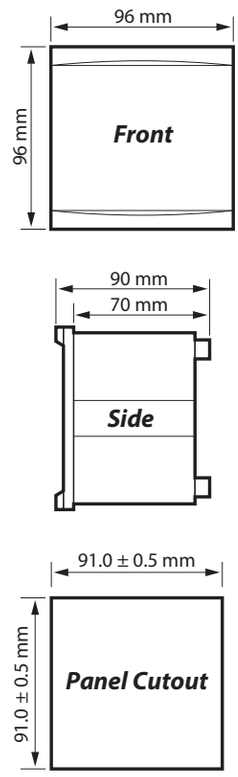

Ordering Information

MODEL	DESCRIPTION
NX300A - 240AD	For 50Hz system, auxiliary voltage 85~265 V AC or 110~340 V DC
NX300EA - 240AD	For 50Hz system, auxiliary voltage 85~265 V AC or 110~340 V DC
NX300A - 230A	For 50Hz system, auxiliary voltage 184~276 V AC
NX300EA - 230A	For 50Hz system, auxiliary voltage 184~276 V AC
NX300A - 110A	For 50Hz system, auxiliary voltage 94~127 V AC
NX300EA - 110A	For 50Hz system, auxiliary voltage 94~127 V AC
NX300A - 240AD6	For 60Hz system, auxiliary voltage 85~265 V AC or 110~340 V DC
NX300EA - 240AD6	For 60Hz system, auxiliary voltage 85~265 V AC or 110~340 V DC
NX300A - 230A6	For 60Hz system, auxiliary voltage 184~276 V AC
NX300EA - 230A6	For 60Hz system, auxiliary voltage 184~276 V AC
NX300A - 110A6	For 60Hz system, auxiliary voltage 94~127 V AC
NX300EA - 110A6	For 60Hz system, auxiliary voltage 94~127 V AC